No. 41: A 10-Meter J-Pole

L. B. Cebik, W4RNL

Many 10-10 operators live in restricted spaces calling for a vertical antenna. Sometimes, the roof-top is not accessible for a simple monopole with radials. However, the alternatives may also be unattractive for the situation. A vertical dipole calls for an elevated feedpoint with the feedline carried away at right angles to avoid RF pick-up on the outside of the line.

So the question that emerges is this one: is there a 10-meter vertical that will cover all of the band that I can feed from the bottom without using any radials?

The answer is "Yes: the J-pole." Ideally, a J-pole is a vertical dipole set above a quarter-wavelength matching section composed of the same materials as the antenna. The end of a dipole shows a very high impedance, unsuited for coax feedline. However, a quarter-wavelength of parallel feedline can transform a very high impedance into a very low one. With the right juggling of dipole length and matching section length, we can obtain a broad 50-Ohm feedpoint impedance.

The J-pole has another advantage: the main radiation from the antenna begins where the dipole portion is above the two-legged matching section. The main current is about half-way up the free and clear dipole section. The effect is the same as placing a ground-plane monopole at a 1/2-wavelength height in terms of added signal strength.

The J-pole's disadvantage--especially on 10 meters--is that it is a considerable structure. The version we shall examine is 20' tall. However, it does not have much side-to-side dimension. Like all vertical antennas, we should install it as far away from houses, trees, and shrubbery as our home site makes feasible. How high we should place the base of the antenna is a question that we shall look at before we are done.

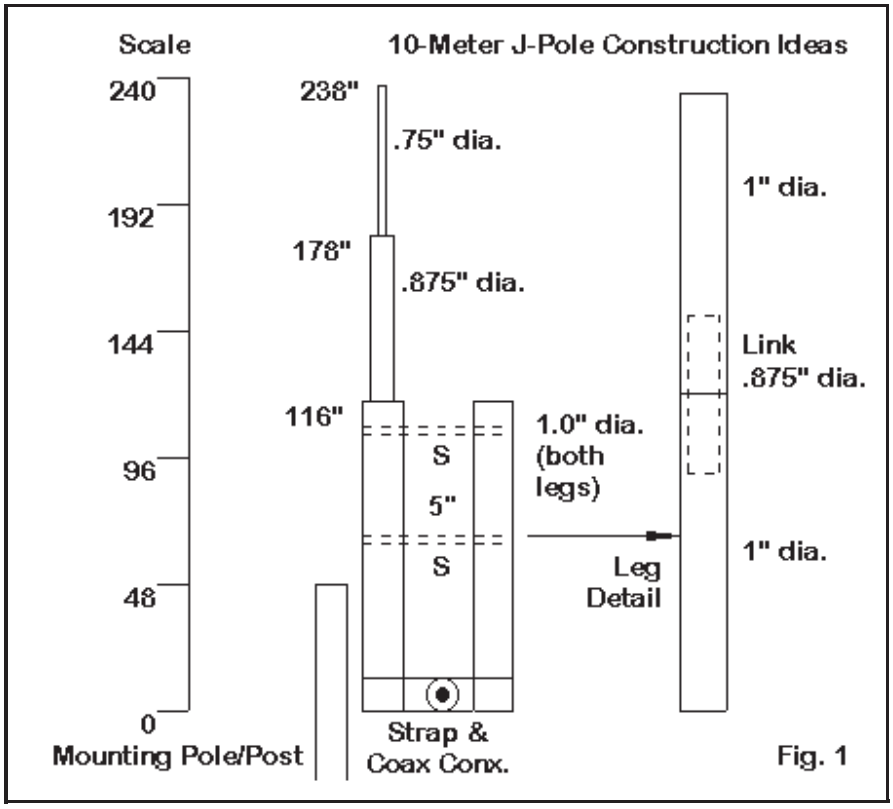

I have designed an interesting variation on the usual J-pole that uses common aluminum tubing that one can obtain either from a hardware depot or from one of the usual sources of antenna tubing stock (such as Texas Towers, among others). The bottom sections are 1: diameter stock, with the dipole consisting of 7/8" and 3/4" stock nested. **Fig. 1** shows the basic details. The first thing that you will notice is that the antenna has several features unlike some of the VHF J-poles that are so common. The usual J-pole design has a shorting bar at the base and we then probe up the twin legs until we find the 50-Ohm matching point. This version has dimensions that place the 50-Ohm feedpoint at the very base of the antenna. Hence, the strap in the figure should be non-conductive (plastic, etc.), with a coax connector and fat leads to each leg. Remember that the feedline is in series with the connections. We also need to place a 1:1 choke balun at the feedpoint to suppress any RF on the outside of the coax.

This design results in upper dimensions quite different from the usual J-pole. The legs are considerable longer than 1/4 wavelength--about 10" longer. At the same time, the upper section is shorter than 1/2 wavelength, nearly 90" shorter. Why?

Essentially, the dipole leg extends well down into the double-leg region of the antenna. This does not block or cancel radiation, since the high current region is still well above the matching portion of the structure. Many J-pole enthusiasts believe that the structure should be as perfectly a 1/2-wavelength antenna + 1/4-wavelength section as possible. However, the currents in the matching section can never be equal in magnitude and opposite in phase, since one end of the matching section is open-ended and the other is continuous with the radiating portion of the antenna. Hence, such perfection is an illusion. The object is to arrive at a set of dimensions that will radiate effectively and provide a match for our feedline.

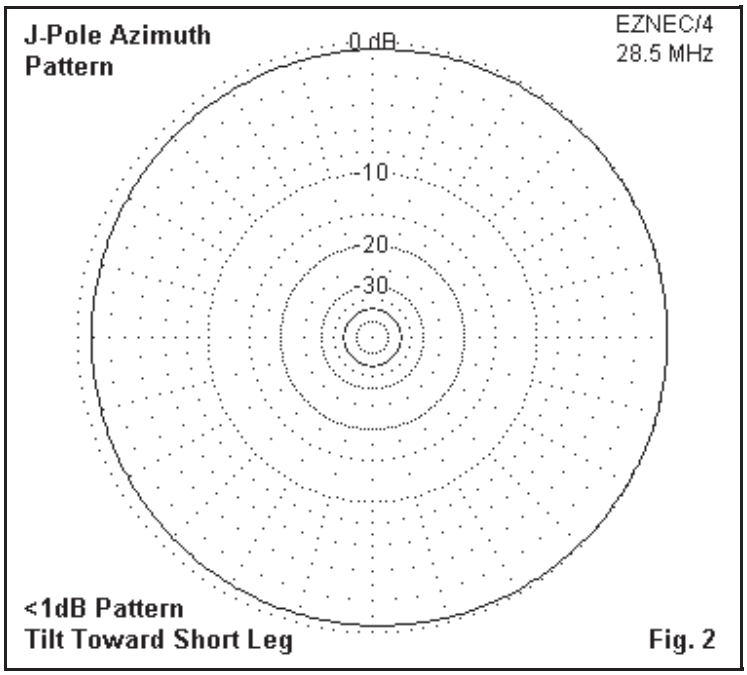

The J-pole pattern is omni-directional, with only a very small offset created by the double-leg matching section. **Fig. 2** shows a typical azimuth pattern, along with the very small offset in the direction of the open-end leg of the matching section. The offset cannot be detected in operation.

Now we can see if raising the base of the antenna makes any difference to performance.

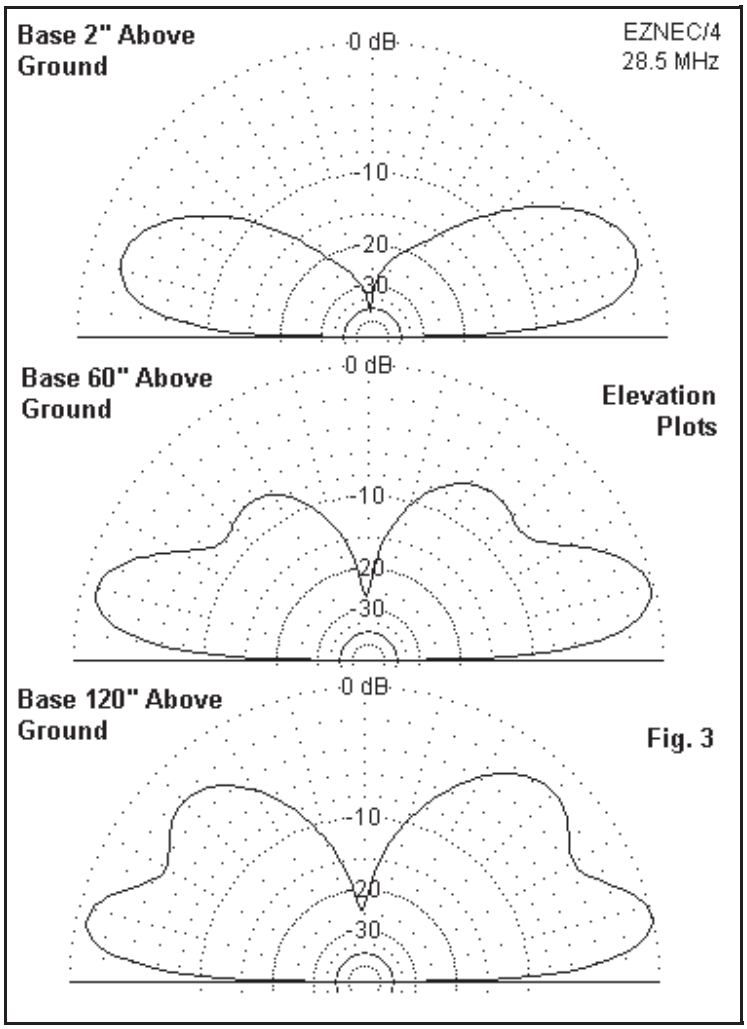

Fig. 3 gives us the answer. With the antenna close to ground, we obtain a single-lobe elevation pattern about 1 dB (hardly detectable) weaker than more elevated base positions. The antenna will be about 20' tall overall, and most installations would opt for this height as the simplest mechanically.

The middle pattern raises the base of the antenna 5' off the ground, for an overall height of 25' for the tip. We obtain close to maximum gain in the lowest lobe, along with some radiation at higher levels. Some folks prefer this height because it gives better short-skip performance without changing the DX performance.

The bottom pattern raises the antenna base to 10' off the ground, for a total structure height of 30'--almost the same as a 1/4-wavelength ground-plane monopole for 40 meters. At this height, we do not gain more than a dab of gain at the lowest level, but we do acquire even stronger high-angle radiation.

As we raise the antenna, we also acquire the need for sturdier base materials for installation. At the lowest level a buried 4x4 or PVC pipe section can support the antenna. The longer the support above ground, the longer the portion in the ground, if we wish a stable structure. Hence, most folks place the base fairly close to ground.

The other structural cautions involve stabilizing the structure itself. First, note the spacers in Fig. 1.

Any plastic material that will stand up to the sun will do to keep the matching section legs correctly spaced at 5" center-to-center. Second, the tapering diameter upper potions of the antenna will sway in the wind. Adding light rope (1/8" to 3/16" diameter) guys will limit the sway and the extend the life of the tubing.

The mounting system that you devise for the antenna will detune it from its ideal conditions. However, the design has some adjustability in it. First, the long matching-section legs are composed of two pieces of tubing, with a linking tubing piece inside. Hence, we can lengthen the legs (or shorten them if we make the 1" sections total just a little less than 116"). As well, the upper sections of tubing are each shorter than the usual 6" store lengths. Hence, we have the ability to lengthen or shorten the overall height of the antenna.

Tuning up the antenna is a matter of juggling the matching section leg lengths and the overall length of the antenna. Increasing the leg lengths while keeping the overall height constant raise both the resistance and the reactance at the feedpoint. Raising the total antenna height while keeping the matching legs constant raises reactance but lowers the resistance. Hence, by juggling the leg length and the total height, we can create an SWR curve that is less than 2:1 across the entire 10-meter band from 28.0 to 29.7 MHz. All-stainless-steel hose clamps with slots in the upper ends of the tubing make a good way to adjust and them tighten down the final assembly.

These notes have only pointed at the mechanical features of a J-pole installation. Before buying any tubing for one, be sure to plan carefully the entire mounting system. If you use metal devices to attach the antenna to the mounting post or pole, expect to spend a bit of time retuning the antenna for full band coverage. Do not use a metal pole for mounting. Instead, use a ground lead from the coax side of the RF choke balun at the feedpoint and connect it to an 8' ground rod.

If you use tubing diameters other than those listed, also expect to spend considerable time tuning up your version of the J-pole. As we raise the operating frequency, changes in element diameter of even 1/8" become larger influences on the resonant frequency of an antenna. At 10 meters, we cannot use the dimensions listed in an article unless we also use the same materials.

Avoid the cheap aluminum electrical conduit for antenna elements, whether vertical or horizontal. It is both heavy and soft. The end result is often a bent element or a broken mounting system. The lighter and harder aluminum tubing used by commercial antenna makers is still the best material for the home antenna builder.

The J-pole is not a magic antenna, but it is a useful addition to the array of verticals at our disposal. Expect it to perform like any other vertical dipole at the same top height. But if you need a vertical and want to feed it at the base, the J-pole may be a good candidate for the job.